22865716

Ryerson University

Department of Mechanical and Industrial Engineering

MTL 200: Materials Science Fundamentals

Instructor (circle): Machin Macwan Vandersluis

Term Test 1 - Makeup

Closed Book

March 10, 2016

Duration: 50 minutes

Name: (First Name)_____ **(Last Name)**_____

Section: _____

Student Number: _____

Question	1	2	3	4	Total
Max. Marks	10	10	10	10	40
Marks Obtained					

Question 1: Multiple Choice (Only one correct or most appropriate answer please)

1. To which group would an element with the following electron configuration belong to?

$$1s^2\ 2s^2\ 2p^6\ 3s^2\ 3p^5$$

   a) I
   b) II
   c) VII
   d) VIII

2. What type(s) of bonding would be expected for rubber?
   a) Ionic bonding
   b) Metallic bonding
   c) Covalent bonding with some van der Waals bonding
   d) Van der Waals bonding

3. Which of the following has a higher boiling point?
   Electronegativities: H=2.1, Cl=2.9, F=4.1, Br=2.8, I=2.5
   a) HCl
   b) HF
   c) HBr
   d) HI

4. The ideal relation of a to R for a BCC unit cell is:
   a) a =2R
   b) a =4R/√3
   c) a = 4R/√2
   d) a =1.633R

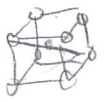

$\sqrt{3}a = 4R$

5. Which of the following statements are true regarding diffraction of electromagnetic radiation of wavelength λ:
   e) d-spacing of a crystalline material can be measured if $d << \lambda$
   f) Destructive interference occurs when the path difference of adjacent X-rays is equal to $n\lambda$
   g) d-spacing of a crystalline material can be measured if d is of the same order as λ
   h) The angle θ is called the "diffraction angle"

6. For a screw dislocation, the Burger's vector is:
   a) Parallel to the dislocation line
   b) Perpendicular to the dislocation line
   c) Parallel to the grain boundary
   d) Perpendicular to the grain boundary

7. For the stacking sequence **ABCABCCBACBAABABCABCABC,** what defects are present and the order of occurrence :
   a) Dislocation, Stacking Fault
   b) Twin, Stacking Fault
   c) Stacking Fault, Twin
   d) Twin, Dislocation

8. Which plane in a BCC crystal structure has the closest interplanar separation?
   a) (111)
   b) (110)
   c) (100)
   d) (200)

$$d = \frac{a}{\sqrt{h^2+k^2+l^2}}$$

9. Rank the magnitudes of the diffusion coefficients from greatest to least for the following systems (R_{Fe} = 0.156 nm, R_N = 0.056 nm, R_{Cr} = 0.166 nm):

   2 **1) N in Fe at 700°C**
   4 **2) Cr in Fe at 700°C**
   1 **3) N in Fe at 900°C**
   3 **4) Cr in Fe at 900°C**

   a) 3, 4, 1 then 2
   b) 2, 1, 4 then 3
   c) 4, 2, 3 then 1
   d) 3, 1, 4 then 2

10. Which of the following is **NOT** a diffusion related process:
   e) Case hardening of gears
   f) Modulus of elasticity
   g) Semiconductor doping
   h) Grain growth

Question 2: X-ray diffraction was carried out on gold, an FCC structure. If the angle of diffraction for the {111} set of planes occurs at 38° (first-order diffraction) when monochromatic X-rays having a wavelength of 0.1542 nm are used, compute (a) the interplanar spacing for this set of planes, (b) the lattice parameter of the FCC unit cell, and (c) the atomic radius of gold atoms.

$$n\lambda = 2d\sin\theta \qquad d = \frac{a}{\sqrt{h^2+k^2+l^2}}$$

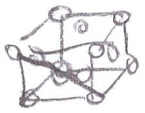

$\sqrt{2}\,a = 4R$

(a) $(0.1542\ \text{nm}) = 2\,d\,\sin\left(\frac{38}{2}\right)$

$d = 0.237\ \text{nm}$ //

(b) $a = (0.237\ \text{nm})\left(1^2+1^2+1^2\right)^{1/2} = 0.410\ \text{nm}$ //

(c) $R = \frac{\sqrt{2}\,a}{4} = 0.145\ \text{nm}$ //

Question 3: Short Answer. (Enter the final answer in the box provided. Only the final answer will be graded. Please include units in your answer if necessary.)

(a) Determine the Miller index for the following crystallographic planes **(2 marks each)**.

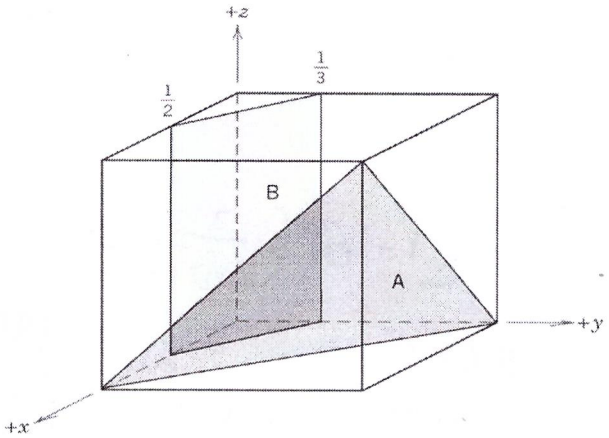

Answers:

A: $\{\bar{1}11\}$

B: (230)

(b) Determine the Miller index for the following crystallographic directions **(1.5 marks each)**.

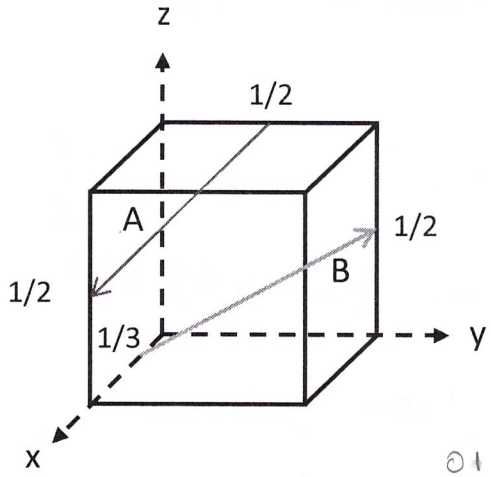

Answers:

A: $[\bar{2}\ 6\ 3]$

B: $[2\ \bar{1}\ \bar{1}]$

$1\ \ -\frac{1}{2}\ \ -\frac{1}{2}$

$-\frac{1}{3}\ \ 1\ \ \frac{1}{2}$

$\bar{2}\ \ 6\ \ 3$

$0\ 1\ \frac{1}{2}$

$\frac{1}{3}\ 0\ 0$

$-\frac{1}{3}\ 1\ \frac{1}{2}$

$1\ 0\ \frac{1}{2}$

$0\ \frac{1}{2}\ 1$

$1\ -\frac{1}{2}\ -\frac{1}{2}$

(c) Calculate the number of potential vacancies (N) in silver (D=60 mm, 3 mm thick, atomic weight = 107.87 g/mol, FCC, density = 10.49 g/cm^3 and N_A=6.022 x 10^{23} atoms/mol) at standard temperature **(3 marks)**.

Answer: 5.86×10^{22} sites

$\cancel{N_v = N \exp\left(\frac{-Q_v}{kT}\right)}$

$$N = \frac{N_A \rho}{A} = \frac{(6.022 \times 10^{23})(10.49\ g/cm^3)}{(107.87\ g/mol)} =$$

Question 4: If a layer of pure gold and pure silver are to be laminated and diffusion-bonded at 700 °C for one hour, what would be the case depth on the silver side for this process that would result in the concentration being 0.02 wt.% gold? For this situation, assume that the solution to Fick's second law is as follows:

$$C_x = C_o + \left(\frac{C_s - C_o}{2}\right)\left[1 - erf\left(\frac{x}{2\sqrt{Dt}}\right)\right]$$

$R = 8.31$ J/mol·K

$$C_x = 0.02 = 0 + \left(\frac{100-0}{2}\right)\left[1 - erf\left(\frac{x}{2\sqrt{D(1\,hr)}}\right)\right]$$

$$D = D_o \exp\left(-\frac{Q_d}{RT}\right) = \left(\cancel{7.2\times10^{-6}}\ 2.6\times10^{-5}\ m^2/s\right) \exp\left[-\left(\frac{\cancel{168000}\ 190000\ J/mol}{(8.31\ J/mol\,K)(700+}\right.\right.$$

$$= \cancel{6.82\times10^{-15}\ m^2/s}\quad 1.62\times10^{-15}\ m^2/s$$

$$0.02 = 50\left(1 - erf\left(\frac{x}{2\sqrt{(6.82\times10^{-15})(1\,hr \times \frac{60\,min}{hr} \times \frac{60\,s}{min})}}\right)\right)$$

$$0.9996 = erf\left(\frac{x}{9.91\times10^{-6}\ m}\right) \quad 4.83\times10^{-6}$$

$$\frac{0.9996 - 0.9993}{0.9998 - 0.9993} = \frac{z - 2.4}{2.6 - 2.4} \Rightarrow z = 2.52$$

$$x = 2.52(9.91\times10^{-6}) = 2.5\times10^{-5}\ m$$

$$= 0.025\ mm$$

0.012mm.

Formula Sheet

$$n\lambda = 2d_{hkl}\sin\theta$$

$$d_{hkl} = \frac{a}{\sqrt{h^2 + k^2 + l^2}}$$

$$[u'v'w'] \xrightarrow{yields} [u\ v\ t\ w]$$

$$u = \frac{1}{3}(2u' - v')$$

$$v = \frac{1}{3}(2v' - u')$$

$$t = -(u' + v')$$

$$w = w'$$

$$J = \frac{M}{At}$$

$$J = -D\frac{dC}{dx}$$

$$\frac{\delta C}{\delta t} = D\frac{\delta^2 C}{\delta x^2}$$

$$\frac{C_x - C_0}{C_s - C_0} = 1 - erf\left(\frac{x}{2\sqrt{Dt}}\right)$$

$$D = D_0 \exp\left(-\frac{Q_d}{RT}\right)$$

$$N_v = N\exp\left(-\frac{Q_v}{kT}\right)$$

$$N = \frac{N_A \rho}{A}$$

$$C_1 = \frac{m_1}{m_1 + m_2} \times 100$$

$$C_1' = \frac{n_{m1}}{n_{m1} + n_{m2}} \times 100$$

$$C_1' = \frac{C_1 A_2}{C_1 A_2 + C_2 A_1} \times 100$$

$$C_1 = \frac{C_1' A_1}{C_1' A_1 + C_2' A_2} \times 100$$

$$C_1'' = \left(\frac{C_1}{\frac{C_1}{\rho_1} + \frac{C_2}{\rho_2}}\right) \times 10^3$$

$$\rho_{ave} = \frac{100}{\frac{C_1}{\rho_1} + \frac{C_2}{\rho_2}}$$

$$A_{ave} = \frac{100}{\frac{C_1}{A_1} + \frac{C_2}{A_2}}$$

$$N = 2^{n-1}$$

$$N_M\left(\frac{M}{100}\right)^2 = 2^{n-1}$$

z	$erf(z)$	z	$erf(z)$	z	$erf(z)$
0	0	0.55	0.5633	1.3	0.9340
0.025	0.0282	0.60	0.6039	1.4	0.9523
0.05	0.0564	0.65	0.6420	1.5	0.9661
0.10	0.1125	0.70	0.6778	1.6	0.9763
0.15	0.1680	0.75	0.7112	1.7	0.9838
0.20	0.2227	0.80	0.7421	1.8	0.9891
0.25	0.2763	0.85	0.7707	1.9	0.9928
0.30	0.3286	0.90	0.7970	2.0	0.9953
0.35	0.3794	0.95	0.8209	2.2	0.9981
0.40	0.4284	1.0	0.8427	2.4	0.9993
0.45	0.4755	1.1	0.8802	2.6	0.9998
0.50	0.5205	1.2	0.9103	2.8	0.9999

Diffusion species	Host metal	D_0 (m^2/s)	Activation energy (kJ/mol)
Fe	BCC Fe	2.8×10^{-4}	251
Fe	FCC Fe	5.0×10^{-5}	284
C	BCC Fe	6.2×10^{-7}	80
C	FCC Fe	2.3×10^{-5}	148
Cu	Cu	7.8×10^{-5}	211
Zn	Cu	2.4×10^{-5}	183
Au	Ag	2.6×10^{-5}	190
Ag	Au	7.2×10^{-6}	168
Al	Al	2.3×10^{-4}	144
Cu	Al	6.5×10^{-5}	136
Mg	Al	1.2×10^{-4}	131
Cu	Ni	2.7×10^{-5}	256